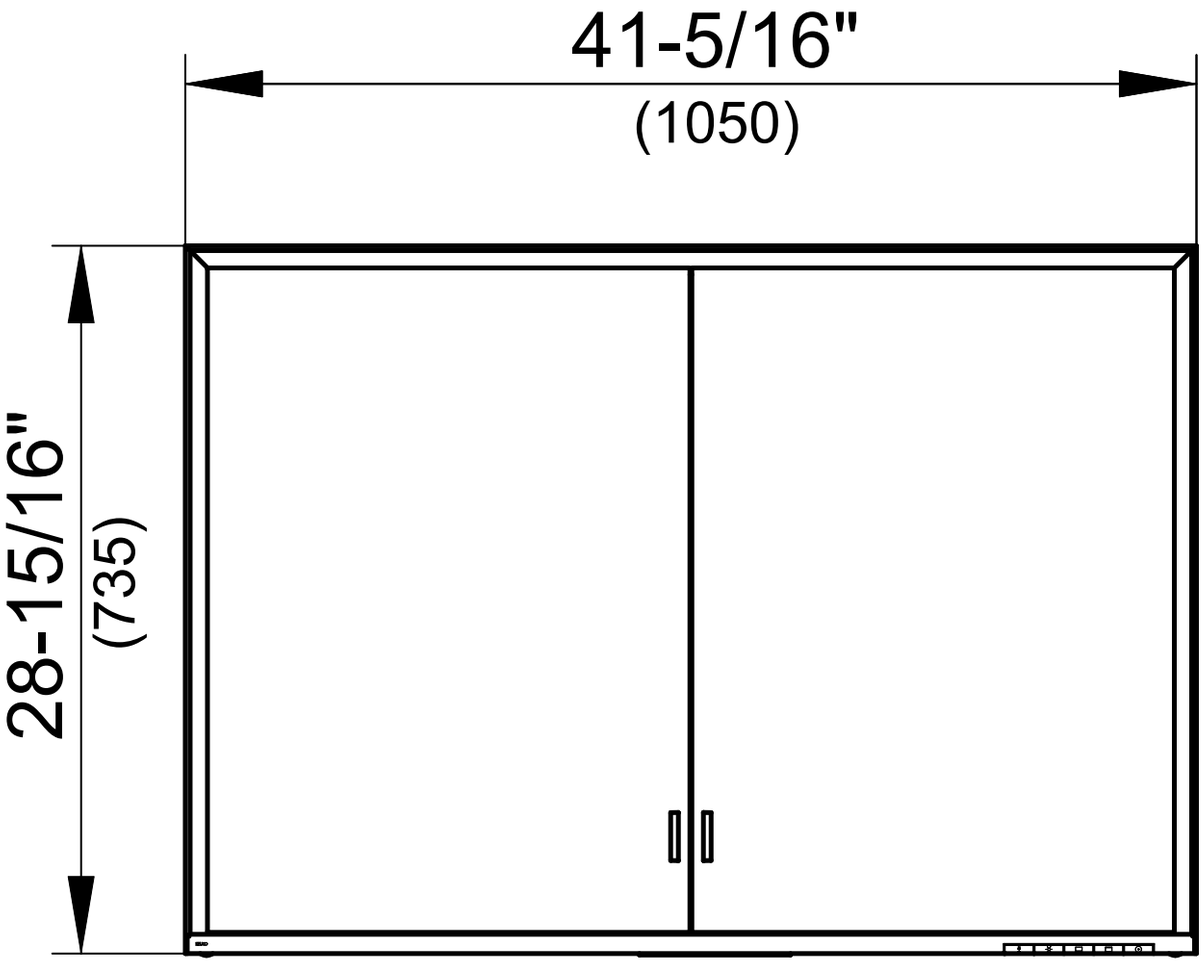
41-5/16"
(1050)
28-15/16"
(735)

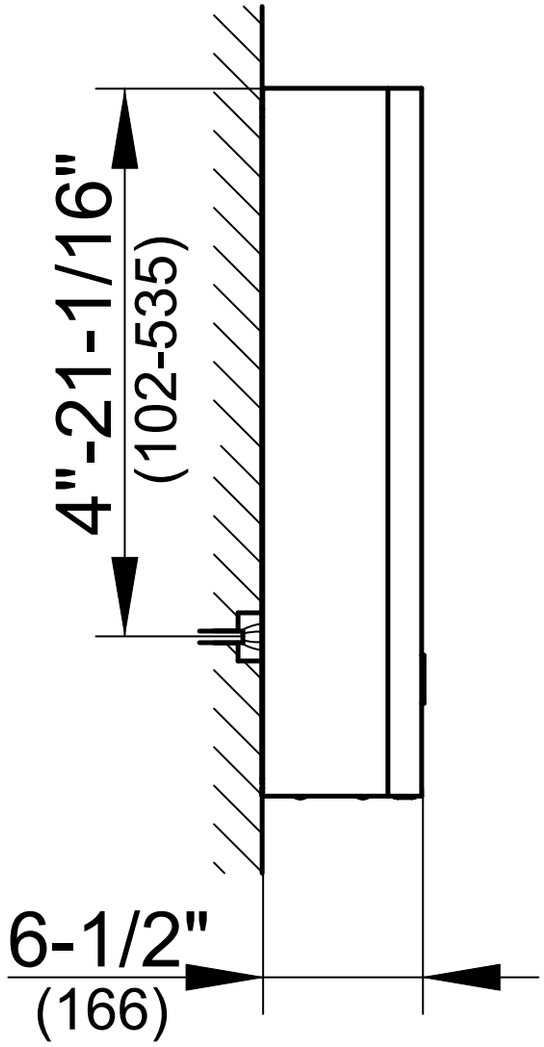
4"-21-1/16"
(102-535)
6-1/2"
(166)

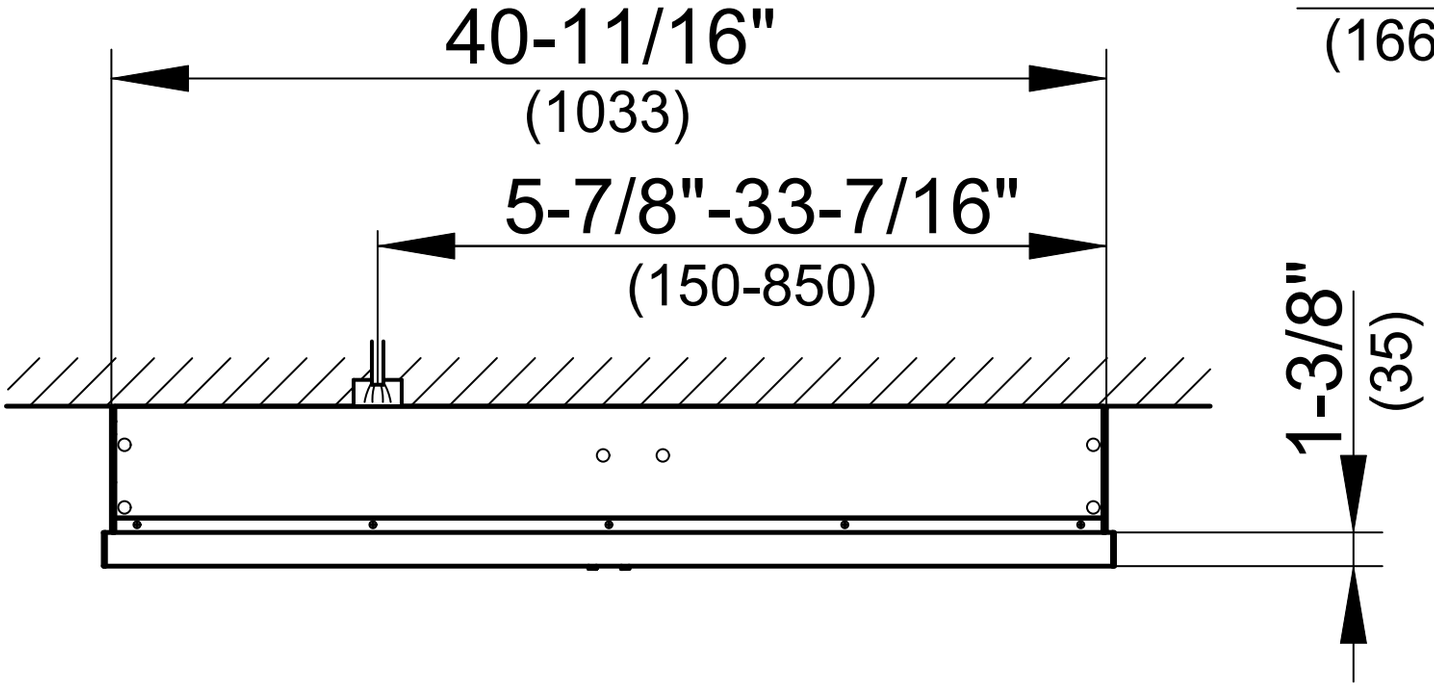
40-11/16"
(1033)
5-7/8"-33-7/16"
(150-850)
1-3/8"
(35)