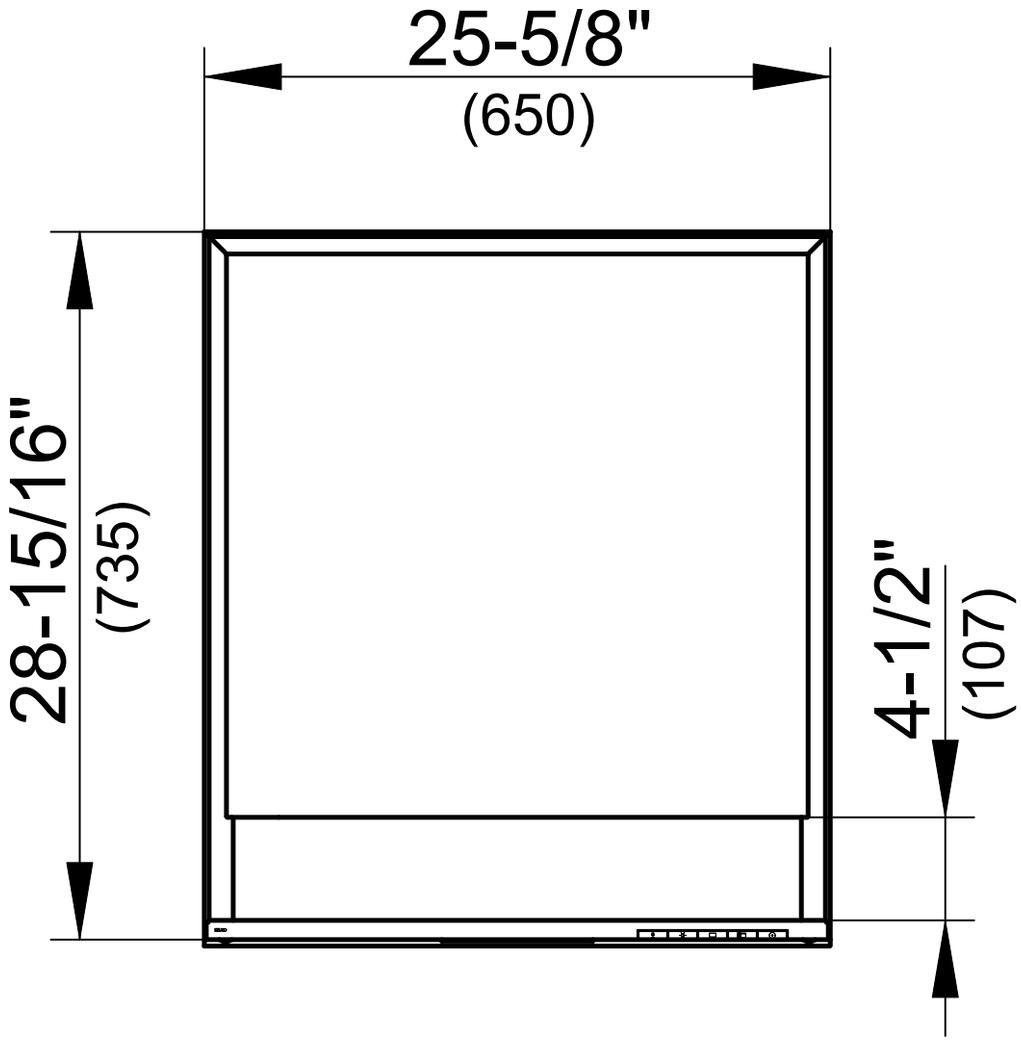
25-5/8"
(650)
28-15/16"
(735)
4-1/2"
(107)

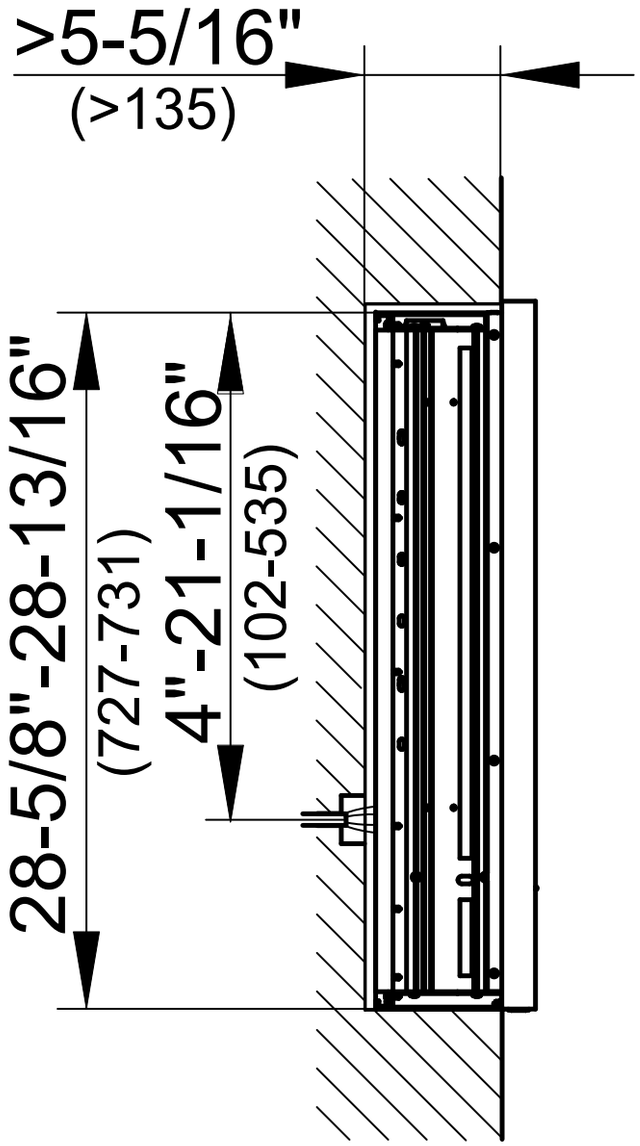
>5-5/16"
(>135)
28-5/8"-28-13/16"
(727-731)
4"-21-1/16"
(102-535)

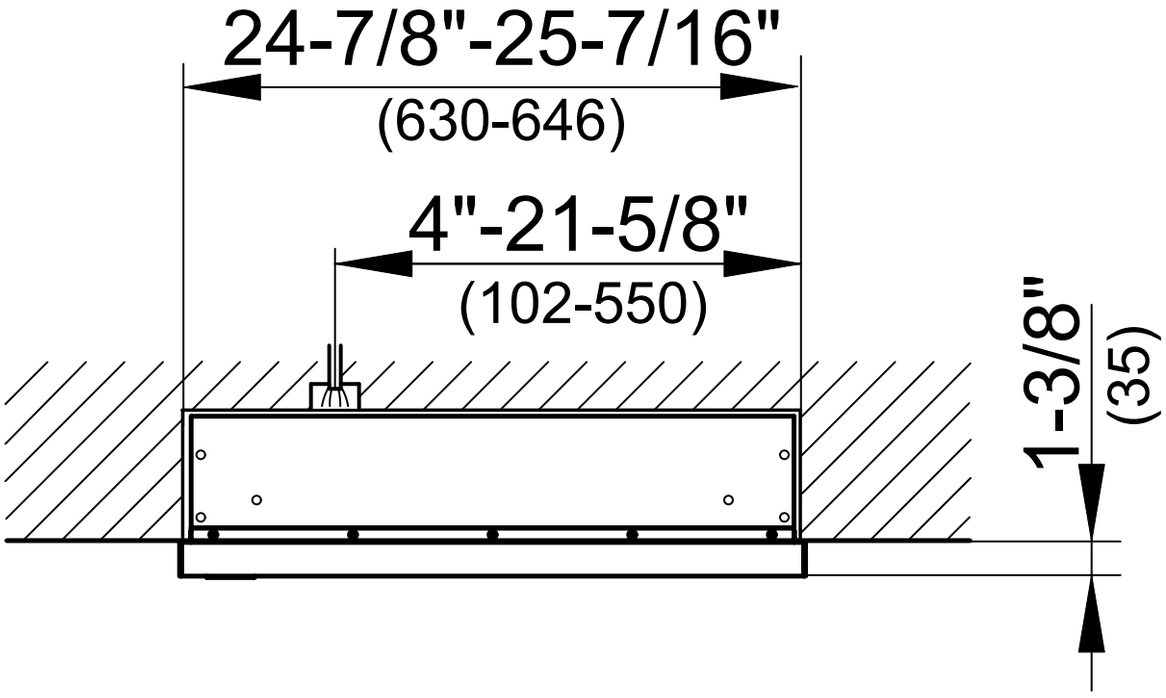
24-7/8"-25-7/16"
(630-646)
4"-21-5/8"
(102-550)
1-3/8"
(35)