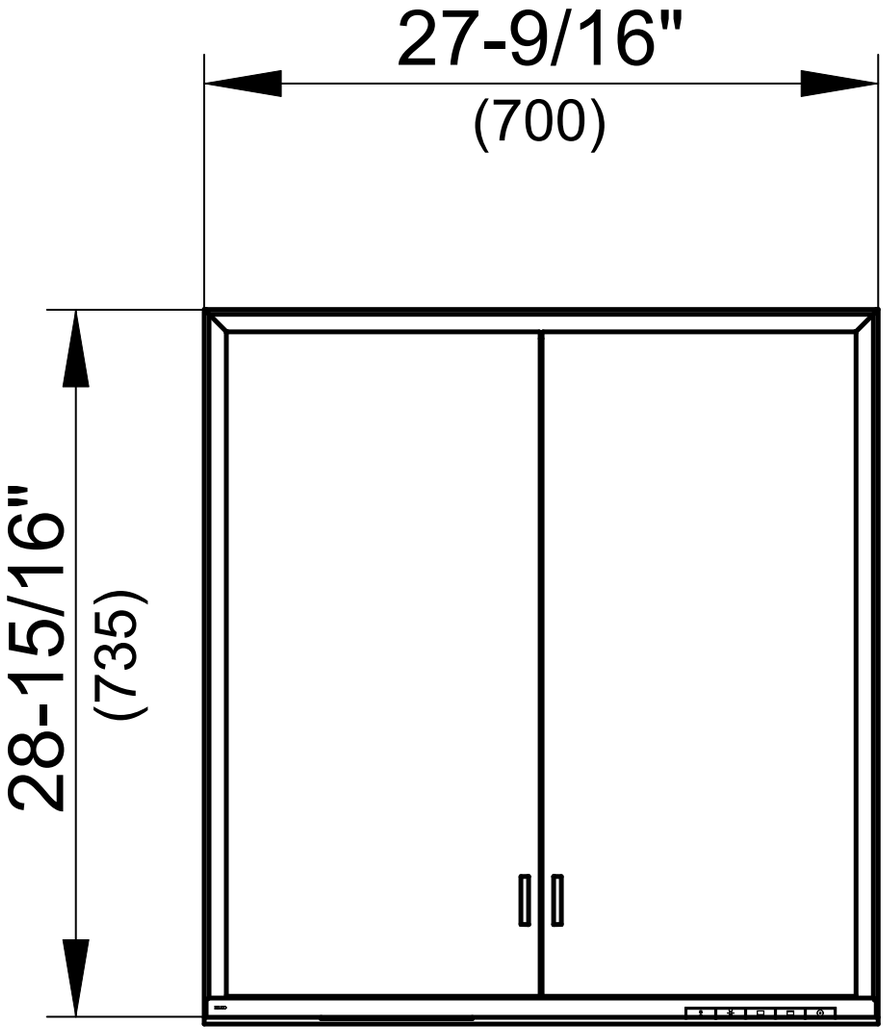
27-9/16"
(700)
28-15/16"
(735)

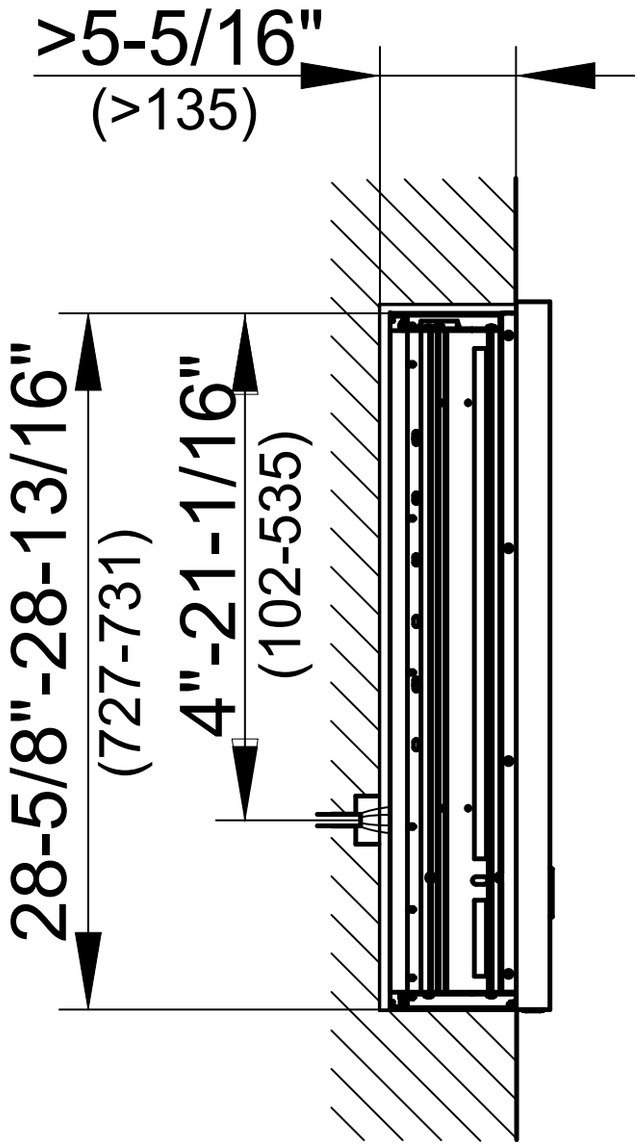
>5-5/16"
(>135)
28-5/8"-28-13/16"
(727-731)
4"-21-1/16"
(102-535)

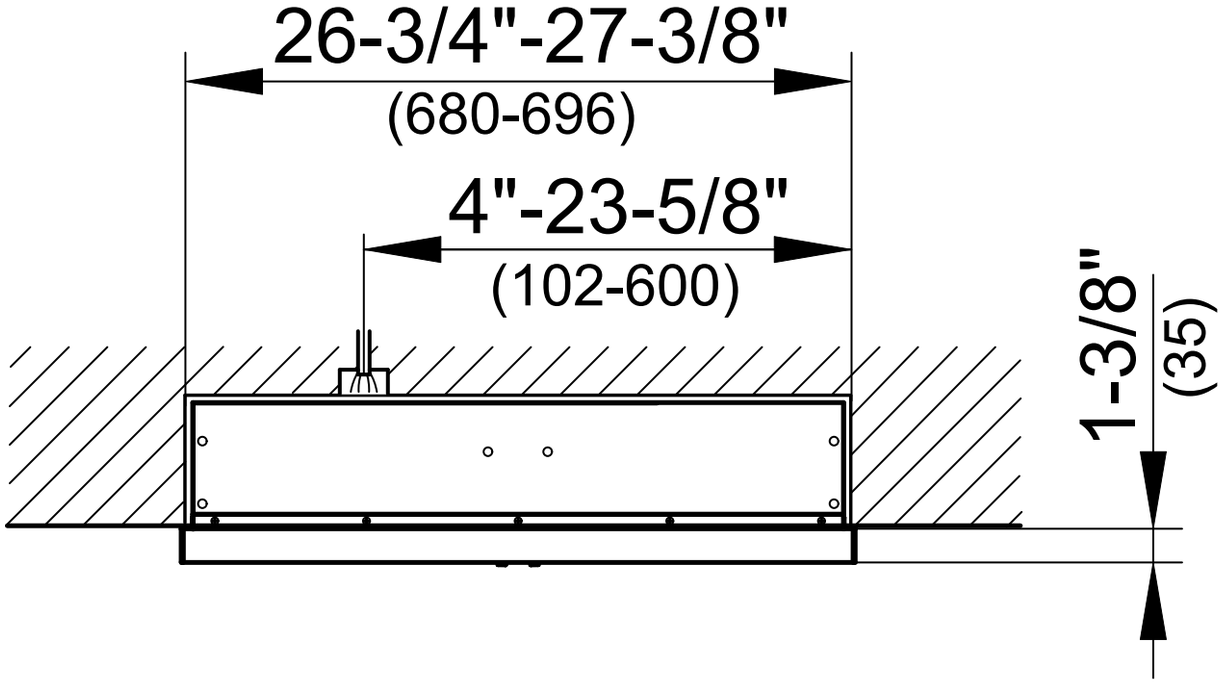
26-3/4"-27-3/8"
(680-696)
4"-23-5/8"
(102-600)
1-3/8"
(35)