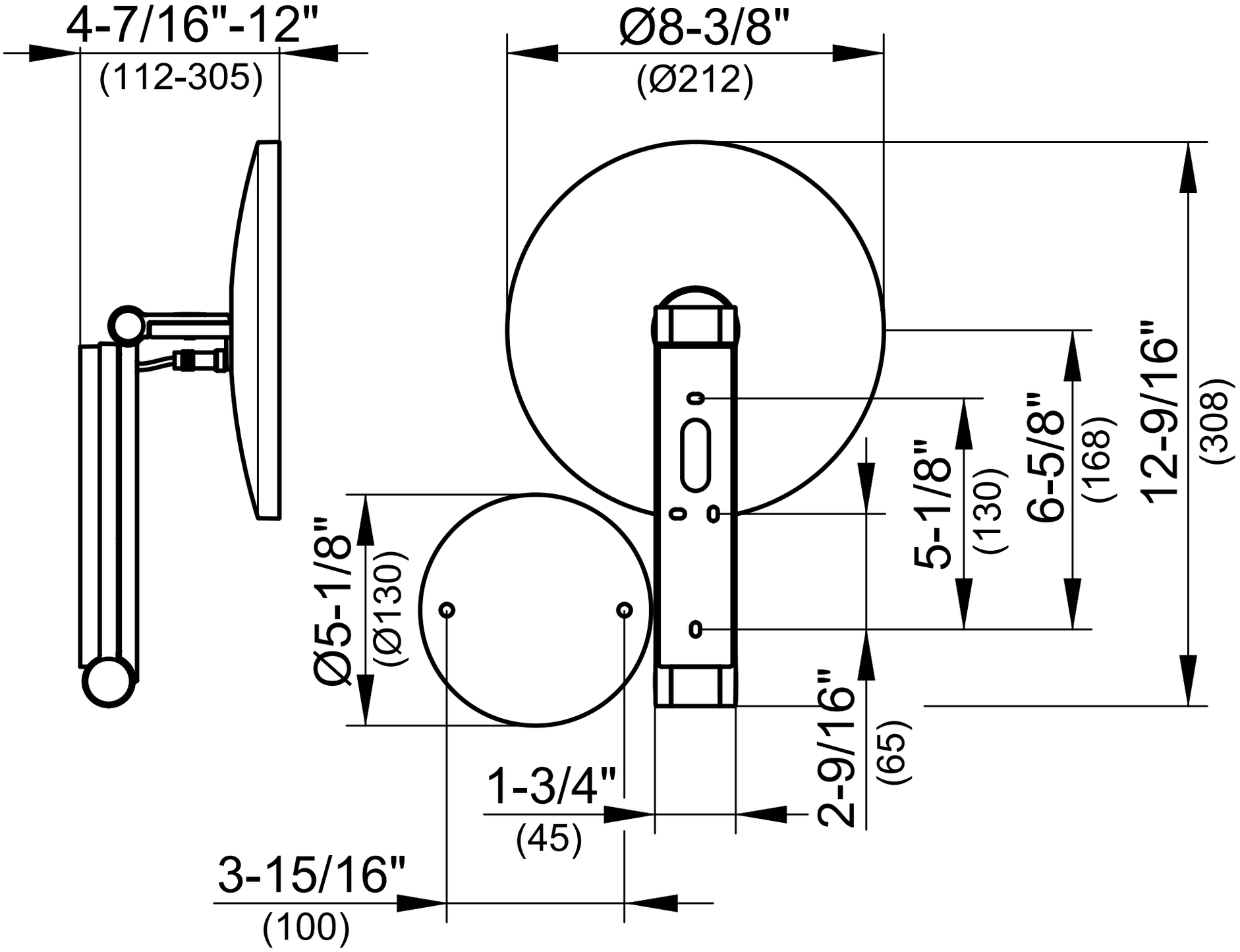
4-7/16"-12"
(112-305)
Ø8-3/8"
(Ø212)
12-9/16"
(308)
6-5/8"
(168)
5-1/8"
(130)
Ø5-1/8"
(Ø130)
2-9/16"
(65)
1-3/4"
(45)
3-15/16"
(100)