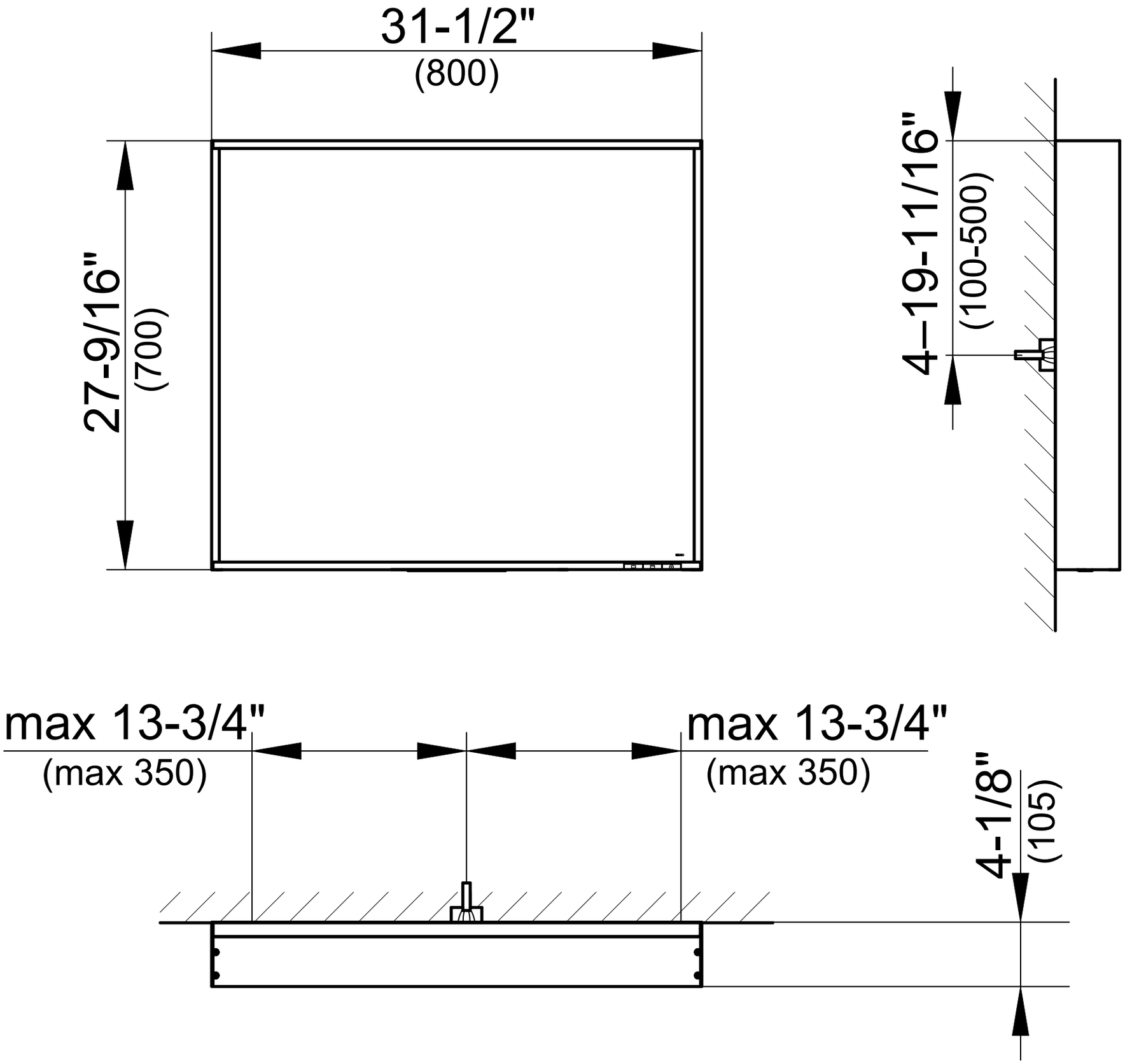
31-1/2"
(800)
27-9/16"
(700)
4–19-11/16"
(100-500)
max 13-3/4"
(max 350)
max 13-3/4"
(max 350)
4-1/8"
(105)